ultrakote
a cemix solution

Typical Window Sill - Brick Mold
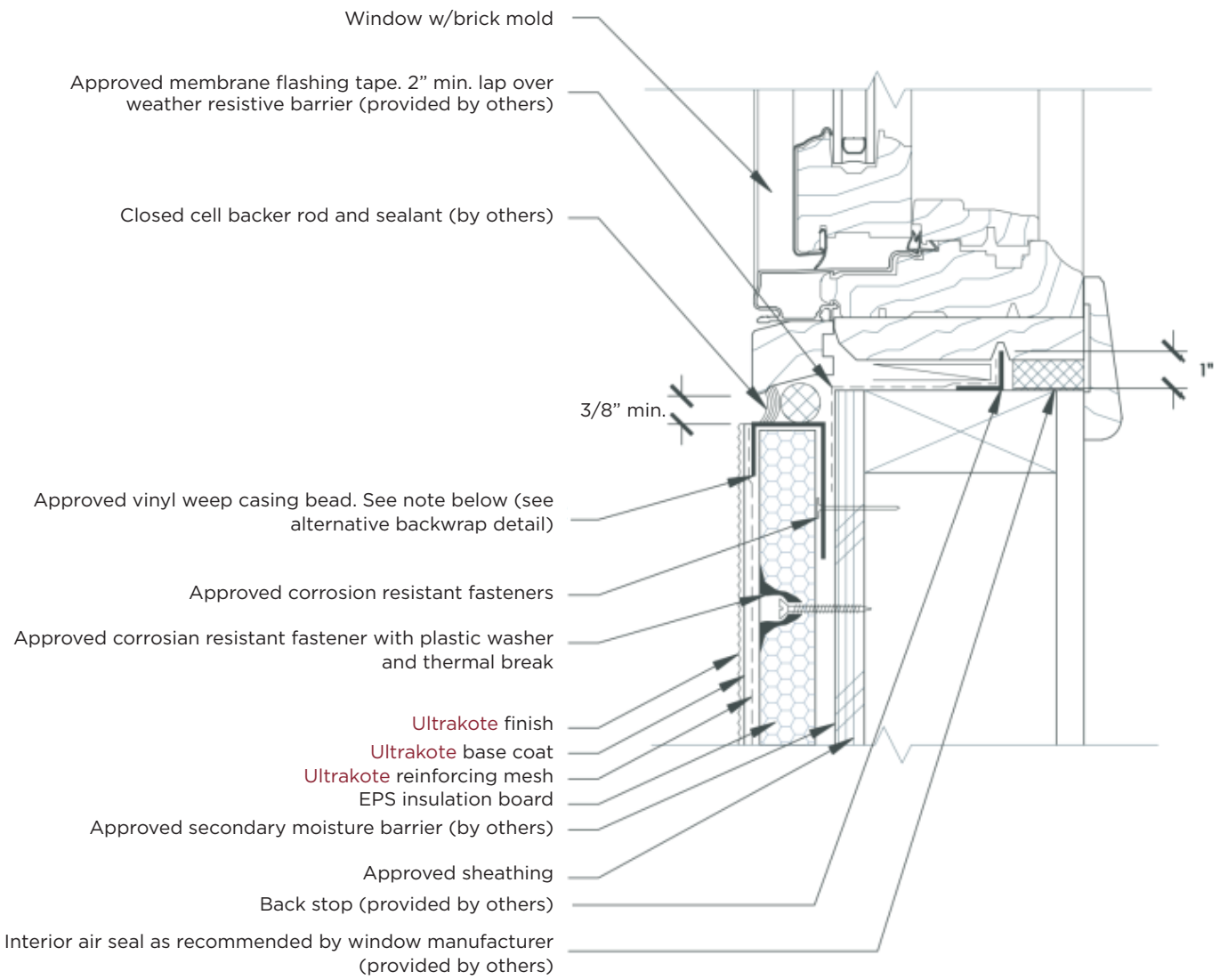
WM 5.3